Sculpt | Recessed - with Accent Option Only

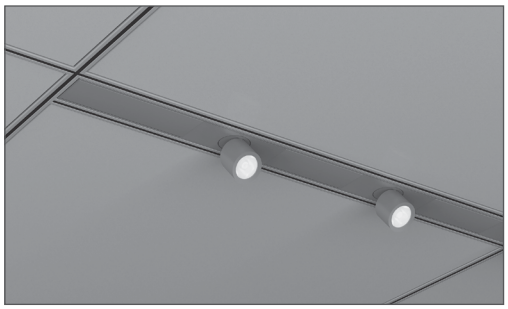

Linear option shown

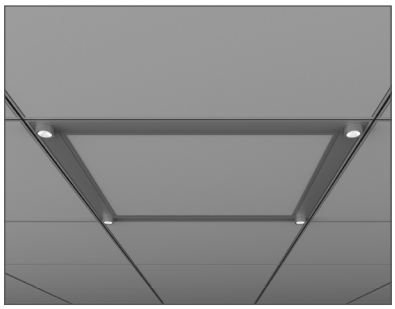

Kit option shown

Project _____

Type _____

Notes _____

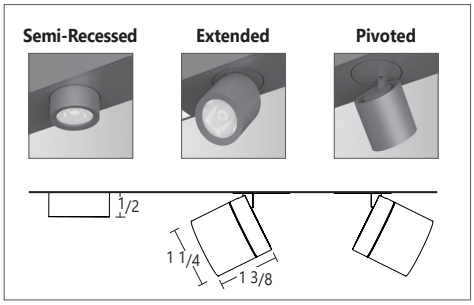

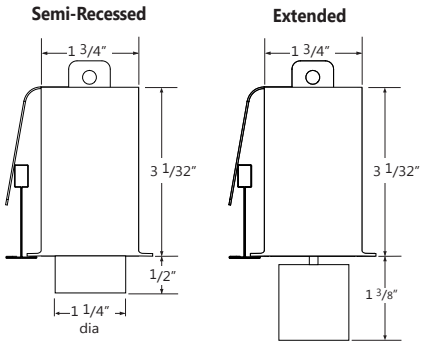

PERFORMANCE

Beam Spread	24°	36°	60°
CBCP	2287 cd	796 cd	446 cd

c UL us Listed

Geometric Lighting

StepLens

LED BOARD & DRIVER 5 YEAR LUMINAIRE WARRANTY

Ordering Guide

A configuration drawing is required

See page 7

SCRAC

PRODUCT ID		ACCENT QTY		BEAM		SHIELDING (OPTIONAL		DRIVER	
SCRAC	Sculpt Recessed with Accent LED	**AC(#)**	Accent quantity	**D24**	24 deg	**HX**	hexcell	**DP**	dimming (0-10V) 1%
				D36	36 deg			**POE(#)**	POE drivers*
				D60	60 deg				
				All Accents on a module will have the same beam spread. Final beam spread arrangements will be specified on shop drawings.		1/8" extended insert		* Specify system	

CHANNEL COVER		CRI		COLOR TEMP.		LINEAR LENGTH or CEILING KIT (select one)				FINISH	
CC	with channel cover	**80**	80 CRI	**27**	2700 K	**2**	2'	**L**	L shape 2' *	**AP**	aluminum paint
WCC	without channel cover*	**90**	90 CRI	**30**	3000 K	**3**	3'	**U**	U shape 2' *	**W**	white
				35	3500 K	**4**	4'	**2x2**	2'x2' *	**BLK**	black
				40	4000 K	**6**	6'	**2x4**	2'x4' *		
						8	8'	**2x6**	2'x6' *		
						12	12'	**2x8**	2'x8' *		
						S(L)	System Run	**2x10**	2'x10' *		
								2x12	2'x12' *		
								4x4	4'x4' *		
								K(#)	Other kits *		
Available with or without channel cover; See page 2 for more details * Fixture comes in black only						* Available as kit; Sculpt accommodates any length. Metric lengths also available, please consult factory.					

VOLTAGE		CIRCUITS		MOUNTING/SUSPENSION				BATTERY (OPT.)		OTHER (OPT.)		CUSTOM (OPT.)	
120	120 V	**1**	1 circuit	**MFTB9**	MiniFlange t-bar 9/16" *	**ST**	screw slot t-bar	**B(#)**	battery pack 4' sections	**F**	fuse *	**C**	custom
277	277 V			**MFTB15**	MiniFlange t-bar 15/16" *	**TG9**	tegular 9/16"			**FW(#)**	flex whip (6' std)		
347	347 V			**MFST**	MiniFlange screw slot t-bar *	**TG15**	tegular 15/16"			**CP**	Chicago plenum		
UNV	universal			**MFTG9**	MiniFlange 9/16" t-tegular *	**DF**	drywall flange						
DC	low voltage*			**MFTG15**	MiniFlange 15/16" t-tegular *	**D**	drywall flangeless						
				TB9	t-bar 9/16"	**DB**	slip-through bracket						
				TB15	t-bar 15/16"	**DS**	drywall spackle flange						
* Only available with POE drivers.				* Must select from these options when ordering kits. See page 3 for more details				Not available with 347V Please consult factory		* Requires 120V or 277V		Please specify	

© 2016 Axis Lighting Inc.

1.800.263.2947
[T] 514.948.6272

axis lighting.com

Sculpt | Recessed - with Accent Option Only

LED SYSTEM

CRI	Minimum 80 or 90 color rendering index
CCT	Choice of 2700K, 3000K, 3500K and 4000K color temperature with a great color consistency (within 3.0-step MacAdam ellipse).
LED life	Minimum 50,000h with 70% of lumen maintenance in 25ºC ambient temperature, in compliance with IES LM-80 testing measurements.
Thermal Management	Aluminum housing acting as the heat sink to maximize life.

CONSTRUCTION

Housing	Extruded aluminum (0.080'' nominal) up to
End Cap	Die cast aluminum
Interior Brackets	Die formed sheet steel (20 gauge)
Hanger	Die cast aluminum
Suspension	Sliding aircraft cable along product length
Cable Grips	Quick connecting / release

ELECTRICAL

Power over Ethernet POE drivers* (consult factory for more information) UL2108 certified for integral or remote driver	MOLEX IGOR O - Other (Consult factory)
Input Voltage	120V, 277V, UNV.

Incorporating these components may have limitations or affect the length of the luminaire. Please contact factory for more details.

WARRANTY

Axis lighting will warrant defective LEDs, boards, and drivers for 5 years from date of purchase. Warranty is valid if luminaire is installed and used according to specifications. If defective, Axis will send replacement boards or drivers at no cost along with detailed replacement instructions and instructions on how to return defective components to Axis.

BEAM SPREADS

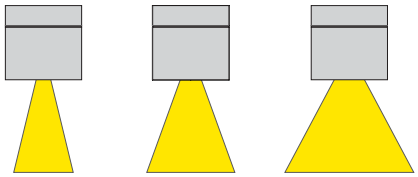

HEXCELL SHIELDING OPTIONS

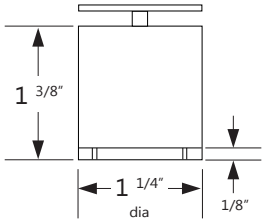

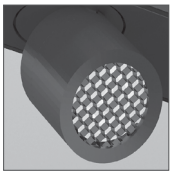

WEIGHT

4 ft	8 lbs / 3.6 kg
8 ft	16 lbs / 7.3 kg
12 ft	24 lbs / 10.9 kg

JOINERS

In order to allow very long runs of SCULPT luminaires, Axis has developed an effective joining system.
Special care has been taken to maximize the performance of the joiner for each SCULPT option.

NOTE: Mount each system segment individually. Do not assemble system prior to mounting.

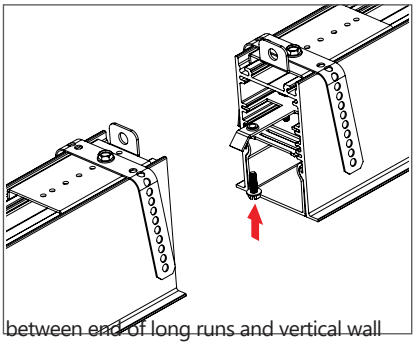

Allow a minimum of 6" between end of long runs and vertical wall

APPROVALS

Certified to UL and CUL standards
Suitable for damp locations.

SYSTEM (S#)

SCULPT linear systems, with the use of a strong profile, allow for a nearly hair thin connection system of continuous runs.
Lengths of 4', 8', 12' as well as custom lengths are available.
Runs of SCULPT that are greater than 12' in length are designated as systems (S#). This means that the run is comprised of a combination of 4', 8' and/or 12' sections to be assembled on site using our joining system. For more information on systems and joining, please refer to the SCULPT installation sheets available for download at www.axislighting.com.

FINISHES

CHANNEL COVER OPTIONS

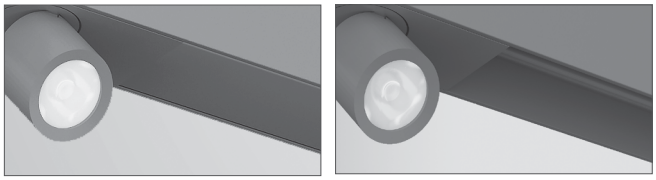

With channel cover | Without channel cover

SAFETY NOTE

Although Accent lamps operate at cooler temperatures than halogen lamps, it is recommended that gloves be worn when adjusting Accents that have been energized.

***Patent Number: 9416535 B1**

© 2016 Axis Lighting Inc.

1.800.263.2947
[T] 514.948.6272
axislighting.com

KIT AND LINEAR - WITH INTEGRATED

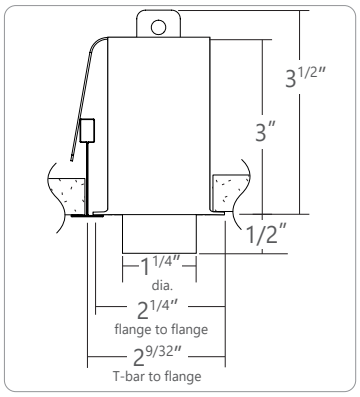

MFTB9 MiniFlange 9/16" T-BAR

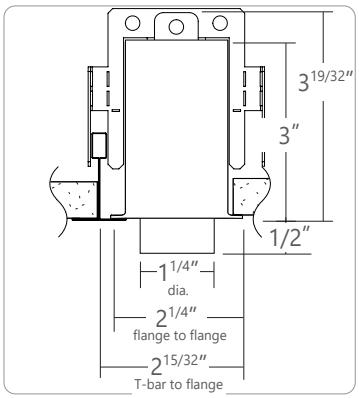

MFTB15 MiniFlange 15/16" T-BAR

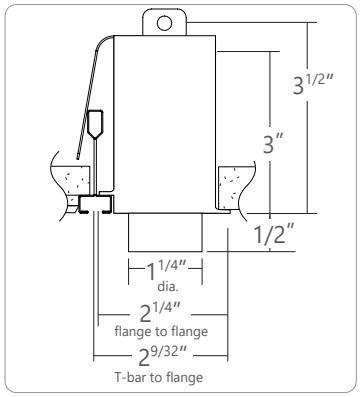

MFST MiniFlange SCREW SLOT T-BAR

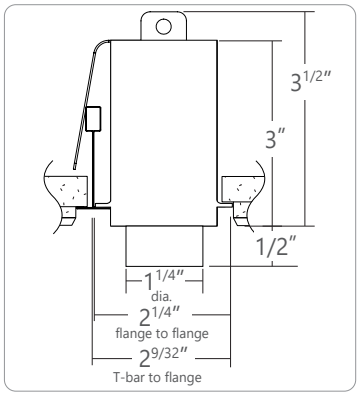

MFTG9 MiniFlange 9/16" T-TEGULAR

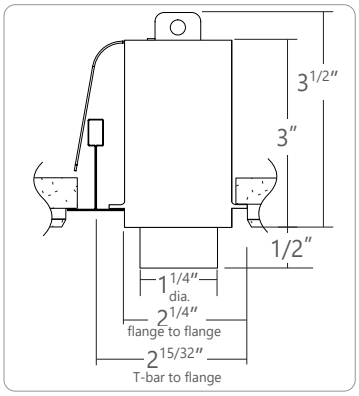

MFTG15 MiniFlange 15/16" TEGULAR

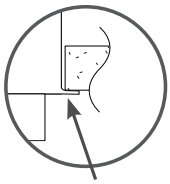

Integrated MiniFlange (patent pending)

When installed along T-bars in acoustic ceilings, the Integrated MiniFlange supports adjacent ceiling tiles. At the same time, it **eliminates the need for a second T-bar.** This feature comes standard on Sculpt Recessed.

- Fewer materials needed and less labor.
- Conceals ceiling tile cutline for a cleaner appearance.
- Simplifies drawings and trade coordination.
- Available in different T-bar profiles.

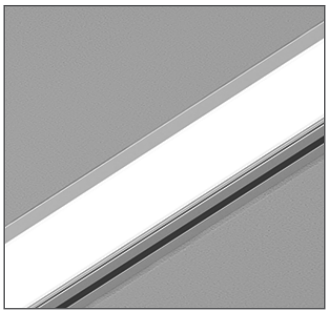

With Integrated MiniFlange

The T-Aligner™ (patent pending)

T-Aligners are installed where T-bars intersect the luminaire or ceiling kit.

- Foolproof solution for a perfectly aligned ceiling grid.
- Connects cut T-bars on either side of a Sculpt luminaire or ceiling kit.
- No need to specify – Comes standard with Sculpt Recessed.
- Compatible with all T-bar profiles including slot and Tegular (9/16" and 15/16").

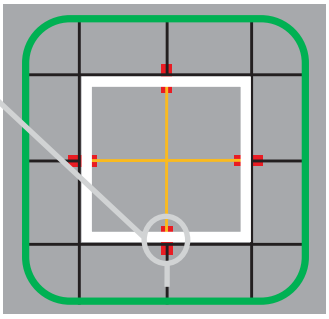

View from above ceiling

© 2016 Axis Lighting Inc.

1.800.263.2947
[T] 514.948.6272

axislighting.com

● STANDARD T-BAR CEILING MOUNTING OPTIONS

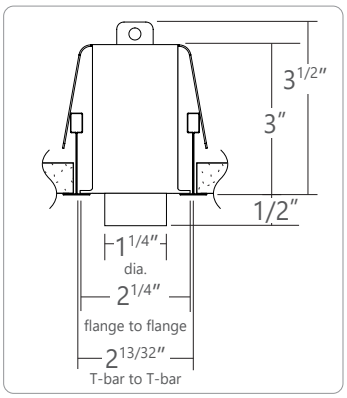

TB9 9/16" T-BAR

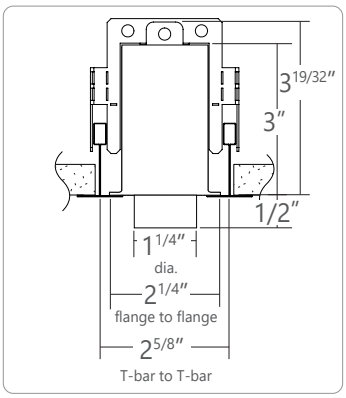

TB15 15/16" T-BAR

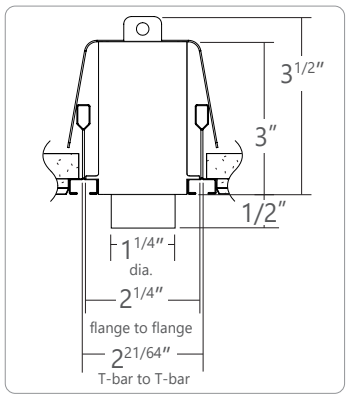

ST SCREW SLOT T-BAR

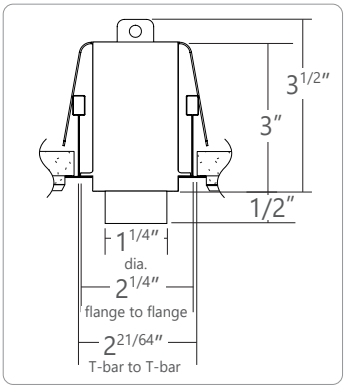

TG9 9/16" T-TEGULAR

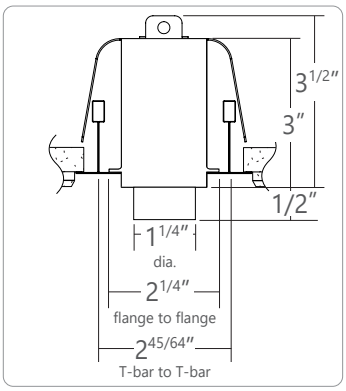

TG15 15/16" TEGULAR

● DRYWALL CEILING MOUNTING OPTIONS

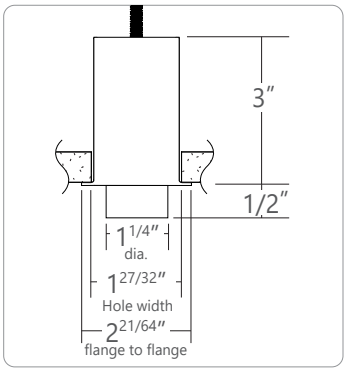

DF VISIBLE FLANGES WITH 1/4-20 STUD MOUNTING

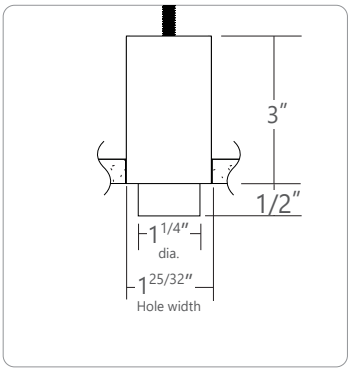

D FLANGELESS WITH 1/4-20 STUD MOUNTING

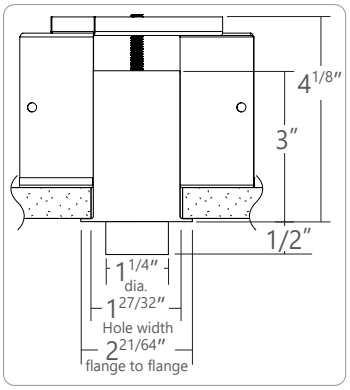

DB SLIP-THROUGH BRACKET

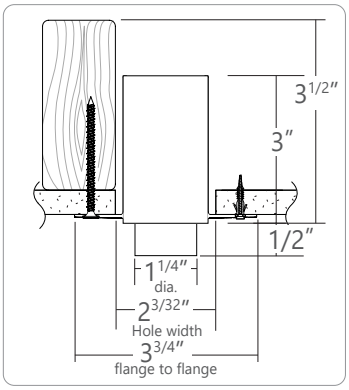

DS DRYWALL SPACKLE FLANGE

© 2016 Axis Lighting Inc.
1.800.263.2947
[T] 514.948.6272
axislighting.com

● *PHOTOMETRIC DATA FOR ACCENT*

L = Beam Length
W = Beam Width
D = Distance
C = Distance to Center Beam
A = Aiming Angle
FC = Foot Candle

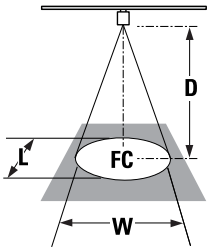

0° horizontal aiming angle

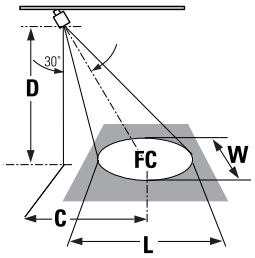

30° horizontal aiming angle

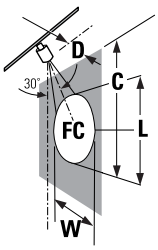

30° vertical aiming angle

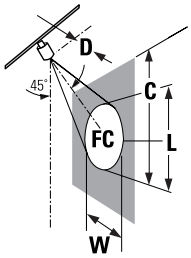

45° vertical aiming angle

Beam Spread	CBCP	Rated Life (hrs.)	D	C	FC	L	W	D	C	FC	L	W	D	C	FC	L	W	D	C	FC	L	W
24°	2287 cd	50,000 L70	5'	0	83	2.1'	2.1'	2'	2.8'	54	2.9'	2.4'	2'	3.4'	67	3.9'	1.6'	2'	2'	185	1.7'	1.1'
			6'	0	57	2.5'	2.5'	3'	3.4'	37	3.4'	2.9'	3'	5.1'	29	5.8'	2.5'	3'	3'	80	2.6'	1.7'
			7'	0	42	2.9'	2.9'	4'	4'	27	4'	4.4'	4'	6.9'	16.4	7.8'	3.3'	4'	4'	53	3.5'	2.3'
			8'	0	32	3.4'	3.4'	5'	4.5'	21	4.6'	3.9'	5'	8.5'	11	9.8'	4.2'	5'	5'	28	4.4'	3'
			D	**C**	**FC**	**L**	**W**	**D**	**C**	**FC**	**L**	**W**	**D**	**C**	**FC**	**L**	**W**	**D**	**C**	**FC**	**L**	**W**
36°	796 cd	50,000 L70	5'	0	29	3.2'	3.2'	2'	2.8'	19	4.4'	3.7'	2'	3.4'	23	7.5'	2.5'	2'	2'	64	2.8'	1.8'
			6'	0	20	3.8'	3.8'	3'	3.4'	13	5.3'	4.4'	3'	5.3'	10	11.3'	3.8'	3'	3'	28	4.3'	2.7'
			7'	0	15	4.5'	4.5'	4'	4'	9	6.2'	5.2'	4'	6.9'	6	15.3'	5.3'	4'	4'	19	5.7'	3.6'
			8'	0	11	5.3'	5.3'	5'	4.5'	7	7.3'	6'	5'	8.5'	4	19'	6.5'	5'	5'	10	4.9'	4.5'
			D	**C**	**FC**	**L**	**W**	**D**	**C**	**FC**	**L**	**W**	**D**	**C**	**FC**	**L**	**W**	**D**	**C**	**FC**	**L**	**W**
60°	446 cd	50,000 L70	5'	0	16	5.7'	5.7'	2'	2.8'	11	8.5'	6.6'	2'	3.4'	13		4.5'	2'	2'	36	6.9'	3.4'
			6'	0	11	6.9'	6.9'	3'	3.4'	7	10.3'	7.9'	3'	5.3'	6		6.9'	3'	3'	16	10.3'	4.8'
			7'	0	8	8'	8'	4'	4'	5	12'	9.3'	4'	6.9'	3		9.2'	4'	4'	11	13.8'	6.5'
			8'	0	6	9.7'	9.7'	5'	4.5'	4	13.8'	10.6'	5'	8.5'	2		11.5'	5'	5'	6	17'	8'

© 2016 Axis Lighting Inc.
1.800.263.2947
[T] 514.948.6272
axislighting.com

IMPORTANT – All configurations must be submitted with drawings indicating dimensions and spacing.

© 2016 Axis Lighting Inc.

1.800.263.2947
[T] 514.948.6272

axislighting.com