BEAM SQUARE 2

PENDANT MOUNT - INDIRECT

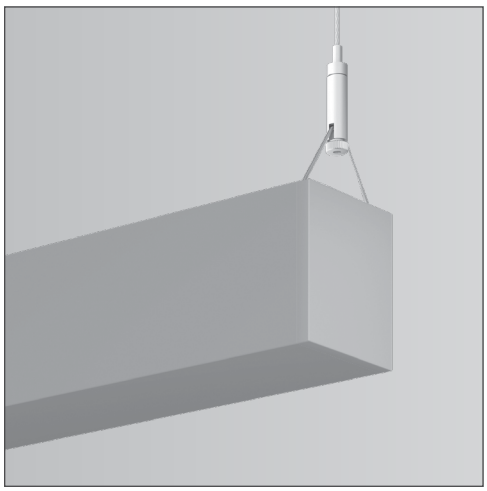

Spotless Lens

Project _____

Type _____

Notes _____

PERFORMANCE PER LINEAR FOOT AT 3500K

NOMINAL LUMEN OUTPUT	INPUT WATTS*	EFFICACY	SHIELDING
1100 lm/ft	11.6 W/ft	94 lm/ft	SLA
1100 lm/ft	10.7 W/ft	103 lm/W	SL

Please consult factory for custom lumen output and wattage.

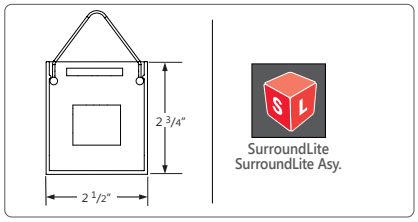

Axitune Dim-to-Warm · Axitune Tunable White · PoE · bios ILLUMINATED · cULus Listed · SurroundLite™ · CONTROL SENSORS · LED BOARD & DRIVER 5 YEAR LUMINAIRE WARRANTY

Ordering Guide

B2SQILED

PRODUCT ID		NOM. LUMENS/FT		CRI		COLOR TEMP.			SHIELDING	
B2SQILED	Pendant Indirect LED	**400**	400 lm/ft - **Minimum**	**80**	80 CRI	**27**	2700 K	**B30** 3000 K - Bios*	**SL**	SurroundLite
		1100	1100 lm/ft - **Maximum**	**90**	90 CRI*	**30**	3000 K	**B35** 3500 K - Bios*	**SLA**	SurroundLite asymmetric
						35	3500 K	**B40** 4000 K - Bios*		
						40	4000 K	**TW2750** 2700-5000 K - Tunable White		
								TW2765 2700-6500 K - Tunable White		
								DW3020 3000-2000 K - Dim to Warm		
		Outputs between listed min and max are available. Consult factory for outputs outside of the listed range. Consult factory for max output with BIOS.		* Not available with Bios.		Consult Axitune technical sheet for more information of color technology. *Consult BIOS guide for more information on BIOS technology				

LENGTH		FINISH		VOLTAGE		DRIVER		CIRCUITS	
2	2′	**AP**	aluminum paint	**120**	120 V	**DP**	dimming (0-10V) 1%	**1**	1 circuit
3	3′	**W**	white	**277**	277 V	**LT(#)**	Lutron*	**2**	2 circuits
4	4′	**BLK**	black	**347**	347 V	**BI**	bi-level dimming	**+E(#)**	emergency circuit*
5	5′	**C**	custom	**UNV**	universal	**O(#)**	other**	**+NL(#)**	night light circuit*
6	6′			**DC**	low voltage*	**DPB(#)**	dimming (0-10V) 1% with Bios*	**+GTD(#)**	generator transfer device*
8	8′					**TW(#)**	tunable white drivers*	**+M**	MR
12	12′					**POE(#)**	POE drivers*		
S(L)	system run *								
*SurroundLite available in 1' increments only				* Only available with POE drivers.		*See page 2 to specify system **Please consult factory; see page 2		*Specify quantity	

MOUNTING/SUSPENSION		BATTERY (OPTIONAL)		OTHER (OPTIONAL)		IC CONTROLS (OPTIONAL)		CUSTOM (OPTIONAL)	
CA(L)	drywall+cable length (36" std.)	**B(#)**	battery pack (integral)	**F**	fuse	**DS(#)**	daylight sensor	**C**	custom
CT9(L)	TB/TG 9/16+cable length (36" std.)					**OS(#)**	occupancy sensor		
CT15(L)	TB/TG15/16+cable length (36" std.)					**DOS(#)**	daylight & occupancy sensor		
CTS(L)	ST+cable length (36" std.)					**EN(#)**	Enlighted integral*		
SA(L)	drywall+stem length >48" (18" std.)					**ENR(#)**	Enlighted remote*		
						WC(#)	wireless control dimming		
White canopy standard		Requires 120V or 277V Minimum 4ft; please consult factory		Requires 120V or 277V		*Please consult factory Specify quantity. Requires 8" blank See integrated controls guide for more details. Consult factory for Tunable White. Not available with DPB (DY) driver for BIOS with Dynamic Spectrum.		Please specify	

© 2016 Axis Lighting Inc.
1.800.263.2947
[T] 514.948.6272

axis lighting.com

SPECIFICATIONS

CONSTRUCTION

Housing	Extruded aluminum (0.075'' nominal) Up to 70% recycled content
End Cap	Cast aluminum
Interior Brackets	Die formed sheet steel (20 gauge)
Hanger	adjustable slide mount
Suspension	Y shape aircraft cable or Ø 1/2" stem
Cable Grips	Quick connecting / release

ELECTRICAL

Lutron driver*	**LDE1** - Hi-lume 1% EcoSystem with Soft-on, Fade-to-Black **LDE5** - 5-Series EcoSystem **LTEA** - Hi-lume 1% 2-wire (120V forward phase only) *Consult factory
Other drivers**	**DALI** - Digital Addressable Lighting Interface **DMX** - Digital Multiplex **LV** - line voltage - Advance Mark 10 **Xitanium SR** - For wireless sensor
BIOS DPB drivers*	**STC** - BIOS control 0-10V with static spectrum and BIOS SkyBlue enabled from 100% to 1%. **DYN**- BIOS control 0-10V with dynamic spectrum and BIOS SkyBlue® with Bio-Dimming™ enabled 100% to 50%, light output dimming from 49% to 1%.
Tunable White TW drivers*	**DALIDT6** - DALI Type 6 (Two DALI Addresses) **DALIDT8** - DALI Type 8 (One DALI Address) **LTTW** - Lutron T-Series Tunable White
Power over Ethernet POE drivers* UL2108 certified for integral or remote driver	MOLEX IGOR **O** - Other (Consult factory)
Emergency	Integral emergency battery pack or emergency circuit optional.
Input Voltage	120V, 277V, 347V, UNV, DC.

***Choose driver from available options.**

Incorporating these components may have limitations or affect the length of the luminaire. Please contact factory for more details.

WARRANTY

Axis Lighting will warrant defective LEDs, boards, and drivers for 5 years from date of purchase. Warranty is valid if luminaire is installed and used according to specifications. If defective, Axis will send replacement boards or drivers at no cost along with detailed replacement instructions and instructions on how to return defective components to Axis.

LED UPGRADE / REPLACEMENT

All LED light engines used are field replaceable and upgradable to ensure the lighting system will last for years. Future-proof design comes with easy access to LED light engines from above using quick connectors (included in luminaire) and a screwdriver.

SYSTEM (S#)

BEAM2 SQUARE linear systems, with the use of a strong profile, allow for a nearly hair thin connection system of continuous runs. Lengths of 4', 8', 12' as well as custom lengths in 1' increments are available. Runs of BEAM2 SQUARE that are greater than 12' in length are designated as systems (S#). This means that the run is comprised of a combination of 4', 8' and/or 12' sections to be assembled on site using our joining system. For more information on systems and joining, please refer to the BEAM installation sheets available for download at www.axislighting.com.

LED SYSTEM

CRI	Minimum 80 or 90 color rendering index.
CRI BIOS	Minimum 80 color rendering index with R9>90 for all CCTs.
CCT Single Color	Choice of 2700K, 3000K, 3500K and 4000K color temperature with a great color consistency (within 3–step MacAdam ellipse). Both within fixture and fixture to fixture.
CCT BIOS	BIOS Static (STC) Choice of 3000K, 3500K and 4000K. BIOS SkyBlue® Dynamic (DYN) Choice of 3000K, 3500K, and 4000K with Bio-Dimming™ Consult BIOS guide for more information on BIOS technology.
CCT Axitune Systems	Consult Axitune technical sheet for more information on color technology.
LED life	Minimum 50,000h with 85% of lumen maintenance in 25°C ambient temperature, in compliance with IES LM-80 testing measurements.
Thermal Management	Aluminum housing acting as the heat sink to maximize life.
Environment	Dry and damp rated in operating ambient temperatures of 0-40°C (32-104F).

LIGHT GUIDE

High precision light guide made of PMMA material, allows distribution of controlled light in all 3-dimensions to put light on both vertical and horizontal planes within the space. Patented lightguide design featuring molecular optics and precision-coupled optic components yield a high efficiency luminaire. In-plane mixing maximizes color uniformity while light emitting area is uniform and diffuse without 'head lighting' from the LED's.

© 2016 Axis Lighting Inc.
1.800.263.2947
[T] 514.948.6272
axislighting.com

InstaJoiner

BEAM2 SQUARE SurroundLite luminaires feature InstaJoiner, a unique, patent-pending joining system developed by Axis offering fast, single-screw tightening.

NOTE: Mount each system segment individually.

Do not assemble system prior to mounting

Allow a minimum of 6" between end of long runs and wall.

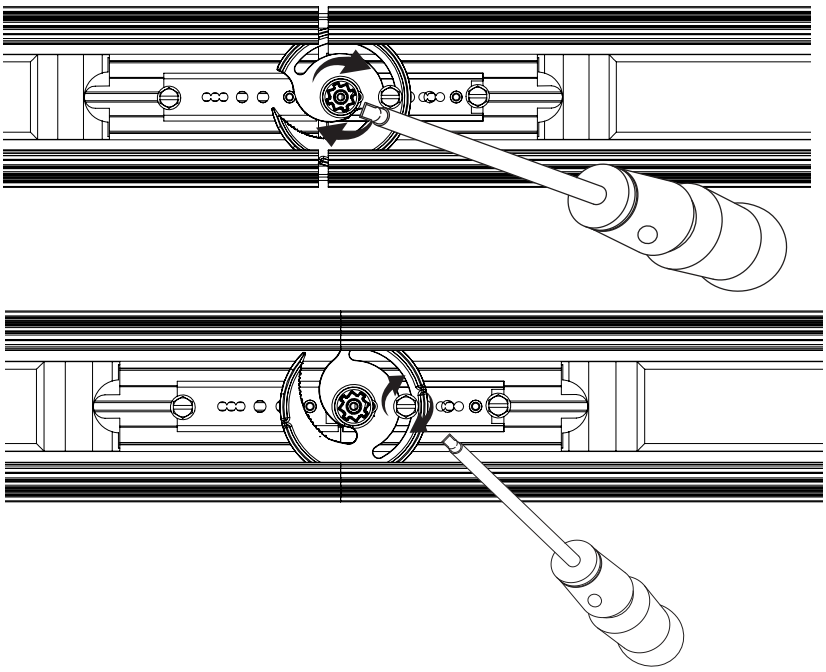

SECTION VIEWS

SL/SLA SurroundLite/SurroundLite Asymmetric

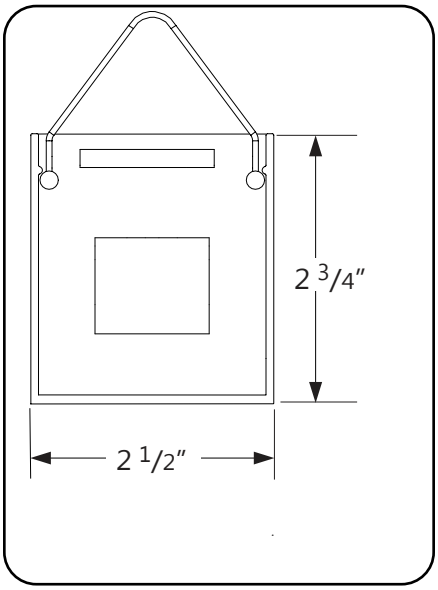

© 2016 Axis Lighting Inc.
1.800.263.2947
[T] 514.948.6272

axis
axislighting.com

MOUNTING OPTIONS

CT TILE CEILING - ON GRID

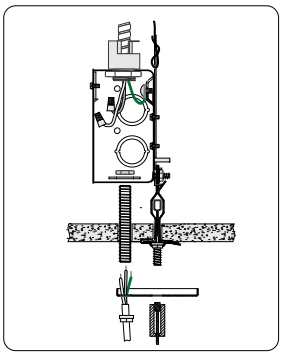

Power feed

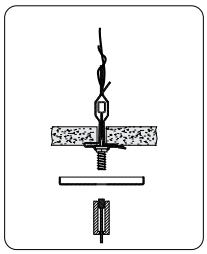

Non power feed

CA DRYWALL CEILING

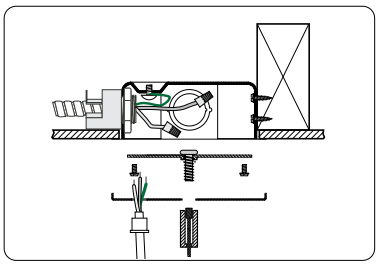

Power feed

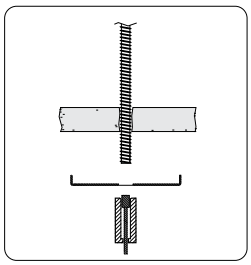

Non power feed

SA STEM MOUNT IN DRYWALL CEILING

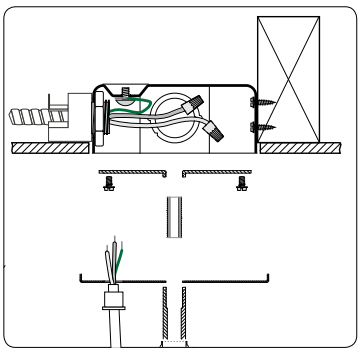

Power feed

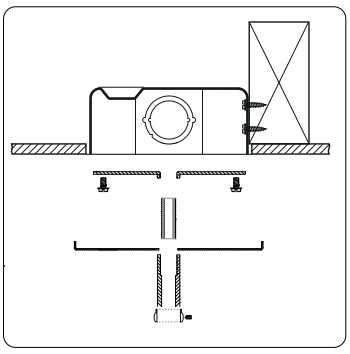

Non power feed

OTHER MOUNTING OPTIONS

BEAM2 SQUARE is also available as Surface or Wall Mount.

Specification sheets and installation sheets for all mountings for BEAM2 SQUARE luminaires are available for download at www.axislighting.com.

© 2016 Axis Lighting Inc.
1.800.263.2947
[T] 514.948.6272
axislighting.com

PHOTOMETRIC DATA

SL SurroundLite - Up

Uplight
1100 lm/ft

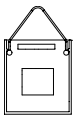

PHOTOMETRIC CURVE

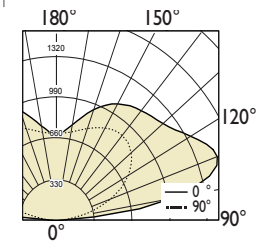

CANDELA DISTRIBUTION

	Horizontal Angles				
Vertical Angle	0	22.5	45	67.5	90
90	3	3	2	2	2
95	293	308	219	124	66
105	1221	1009	538	368	315
115	1276	1039	697	585	553
125	1119	997	815	737	706
135	1040	986	885	811	779
145	991	960	889	816	779
155	900	879	823	756	725
165	758	745	711	675	660
175	633	631	627	622	620
180	614	614	614	614	614

ZONAL LUMENS

Zone	Lumens
90	
90-100	250
100-110	688
110-120	799
120-130	775
130-140	693
140-150	555
150-160	378
160-170	203
170-180	61
180	

Lumen/ft up: 1100 lm/ft
Lumen/ft down: 0 lm/ft
Total Lumens: 4402 lm (for 4ft)
Input Watts: 42.7 W
Efficacy: 103 lm/W
IES FILE: B2SQILED-1100-0-80-35-SL-4.IES

TESTED ACCORDING TO IES LM-79-2008

80 CRI shown. To calculate watts and efficacy at 90 CRI, apply a multiplier of 0.8.

SLA SurroundLite Asymmetric - Up

Uplight
1100 lm/ft

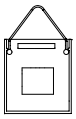

PHOTOMETRIC CURVE

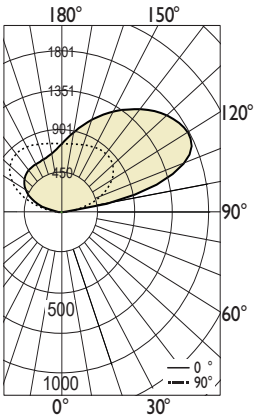

CANDELA DISTRIBUTION

	Horizontal Angles								
Vertical Angle	0	22.5	45	67.5	90	112.5	135	157.5	180
90	2	2	2	1	2	2	4	4	2
95	80	103	19	16	17	17	40	119	77
105	354	496	717	1063	1216	1072	729	507	350
115	615	802	1074	1519	1770	1510	1077	810	612
125	780	979	1245	1586	1769	1578	1242	984	782
135	851	1043	1268	1508	1621	1503	1266	1044	858
145	856	1019	1203	1357	1424	1355	1200	1019	866
155	829	950	1084	1184	1225	1183	1080	949	839
165	797	871	947	1000	1023	998	942	867	805
175	779	802	826	839	847	836	821	797	783
180	775	775	775	775	775	775	775	775	775

ZONAL LUMENS

Zone	Lumens
90	
90-100	95
100-110	544
110-120	808
120-130	847
130-140	754
140-150	590
150-160	407
160-170	233
170-180	75
180	

Lumen/ft up: 1088 lm/ft
Lumen/ft down: 0 lm/ft
Total Lumens: 4354 lm (for 4ft)
Input Watts: 46.3 W
Efficacy: 94 lm/W
IES FILE: B2QILED-1100-80-35-SLA-4.IES

TESTED ACCORDING TO IES LM-79-2008

80 CRI shown. To calculate watts and efficacy at 90 CRI, apply a multiplier of 0.8.

© 2016 Axis Lighting Inc.
1.800.263.2947
[T] 514.948.6272

axis lighting.com