BEAM3 LED | RECESSED - WITH StepLens OPTION

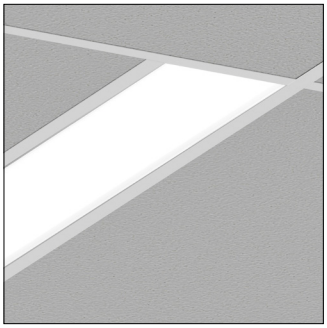

Flush shielding option

StepLens option

Project _____

Type _____

Notes _____

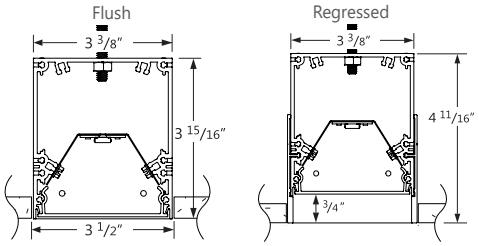

Axitune Dim-to-Warm | Axitune Tunable White | Axitune Color Tuning | PoE | bios

DLC LISTED — * Check the latest update on the DLC website for complete information. Not all versions may be DLC qualified.

TechZone™ & Logix™ compatible | cULus Listed Type I.C. | StepLens | Control Sensors | c UL us Listed | LED Board & Driver 5 Year Limited Warranty

PERFORMANCE PER LINEAR FOOT AT 4000K

NOMINAL LUMEN OUTPUT	INPUT WATTS*	EFFICACY
400 lm/ft	3.7 W/ft	109 lm/W
500 lm/ft	4.6 W/ft	108 lm/W
750 lm/ft	7.1 W/ft	105 lm/W
1000 lm/ft	9.7 W/ft	103 lm/W

* Based on a 4 foot luminaire using one driver
Please consult factory for custom lumen output and wattage.

Ordering Guide

BMRLED

PRODUCT ID		NOM. LUMENS/FT		CRI		COLOR TEMP.				SHIELDING		LENGTH	
BMRLED	Recessed LED	**400**	400 lm/ft - **Min.**	**80**	80 CRI*	**27**	2700 K	**B30**	3000 K - Bios*	**FL**	flush*	**2**	2′
		1000	1000 lm/ft - **Max.**	**90**	90 CRI	**30**	3000 K	**B35**	3500 K - Bios*	**RG**	regressed*	**3**	3′
						35	3500 K	**B40**	4000 K - Bios*	**0.25G**	0.25" Glo lens*	**4**	4′
						40	4000 K	**TW2750**	2700-5000 K - Tunable White	**1.25M**	1.25" StepLens, lum. end cap*	**5**	5′
								TW2765	2700-6500 K - Tunable White	**1.25P**	1.25" StepLens, opaque end cap*	**6**	6′
								DW3020	3000-2000 K - Dim to Warm	**UB**	Ultra blend lens**	**8**	8′
								TC1680	1650-8000 K - Color Tuning			**12**	12′
												S(L)	system run*
		Outputs between listed min and max are available. Consult factory for outputs outside of the listed range. Consult factory for max output with BIOS		* Not available with color tuning. ** Not available with Bios.		Consult Axitune technical sheet for more information of color technology. *Consult BIOS guide for more information on BIOS technology				*Lens options use spotless lens. See page 3 for more details. ** Default lens for Color Tuning, Tunable white and BIOS. Consult factory for other lens.			

MR (OPTIONAL)		FINISH		VOLTAGE		DRIVER		CIRCUITS	
M16(#)	MR halogen lamp - Line voltage (by other)*	**W**	white	**120**	120 V	**DP**	dimming (0-10V) 1%	**1**	1 circuit
M16LED(#)	MR16 LED lamp - Line voltage (by other)*	**C**	custom	**277**	277 V	**LT(#)**	Lutron*	**2**	2 circuits
M16LEDB(#)	MR16 LED lamp - Dimmable (provided)**			**347**	347 V	**BI**	bi-level dimming	**+E(#)**	emergency circuit*
				UNV	universal	**O(#)**	other**	**+NL(#)**	night light circuit*
				DC	low voltage*	**DPB(#)**	dimming (0-10V) 1% with Bios*	**+GTD(#)**	generator transfer device*
						TW(#)	tunable white drivers*	**+LDI**	LED downlight insert
						CT(#)	color tuning drivers*		
						POE(#)	POE drivers*		
*Specify quantity; Line wattage only; Seperate circuits included **Consult factory; See page 4 for more details; M16 constant current for 0-10V & DALI only. Available in 2700K or 3000K; Available in luminaires with Axitune and BIOS but downlight modules will not be tunable white, color tuning, or BIOS LEDs				* Only available with POE drivers.		*Specify system **Please consult factory; see page 2		*Specify quantity	

MOUNTING		BATTERY (OPTIONAL)		OTHER (OPTIONAL)		IC CONTROLS (OPT.)		CUSTOM (OPT.)	
TB9	t-bar 9/16″	**B(#)**	battery pack 4′ sections	**F**	fuse*	**DS(#)**	Daylight sensor	**C**	custom
TB15	t-bar 15/16″			**EF**	end feed	**OS(#)**	occupancy sensor		
ST	screw slot t-bar			**FW(#)**	flex whip (6′ std)	**DOS(#)**	Daylight & occupancy sensor		
TG9	tegular 9/16″			**CP**	Chicago plenum	**EN(#)**	Enlighted integral*		
TG15	tegular 15/16″			**HD**	hold-down clip**	**ENR(#)**	Enlighted remote**		
DF	drywall flange			**AR**	air return plate***	**WC(#)**	wireless control dimming		
D	drywall flangeless			**SR**	sprinkler plate***				
DB	slip-through bracket			**SPK**	speaker plate***				
DS	drywall spackle flange								
TX	tx Hunter Douglas techstyle*								
*TX available with flush lens only		Not available with 347V. Please consult factory Not available with color tuning.		*Requires 120V or 277V **Only available for t-bar mounting ***Please consult factory		*For flush and regressed option only; Please consult factory **Please consult factory Specify quantity. Requires 8" blank. See integrated controls guide for more details. Not available with Color Tuning. Consult factory for Tunable White. Not available with DPB (DY) driver for BIOS with Dynamic Spectrum.		Please specify	

© 2016 Axis Lighting Inc.

1.800.263.2947
[T] 514.948.6272
axis axislighting.com

ELECTRICAL

Lutron driver*	**LDE1** - Hi-lume 1% EcoSystem with Soft-on, Fade-to-Black **LDE5** - 5-Series EcoSystem **LTEA** - Hi-lume 1% 2-wire (120V forward phase only) *Consult factory
Other drivers	**DALI** - Digital Addressable Lighting Interface **DMX** - Digital Multiplex **LV** - line voltage - Advance Mark 10 **Xitanium SR** - For wireless sensor
BIOS DPB drivers*	**STC** - BIOS control 0-10V with static spectrum and BIOS SkyBlue enabled from 100% to 1%. **DYN**- BIOS control 0-10V with dynamic spectrum and BIOS SkyBlue® with Bio-Dimmng™ enabled 100% to 50%, light output dimming from 49% to 1%.
Tunable White TW drivers*	**DALIDT6** - DALI Type 6 (Two DALI Addresses) **DALIDT8** - DALI Type 8 (One DALI Address) **LTTW** - Lutron T-Series Tunable White
Color Tuning CT drivers* ⚠ DMX required for full color control	**DMX** - Standard (required for full color control) **LTA5** - Lutron Araya 5 Ecosystem **DALIDT8** - DALI Type 8 (Single DALI Address) **DLM** - Wattstopper DLM
Power over Ethernet POE drivers* UL2108 certified for integral or remote driver	MOLEX IGOR **O** - Other (Consult factory)
Emergency	Integral emergency battery pack or emergency circuit optional.
Input Voltage	120V, 277V, 347V, UNV, DC.
Flex Whip	Shipped in a separate box for contractors to install

***Choose driver from available options.**

ℹ Incorporating these components may have limitations or affect the length of the luminaire. Please contact factory for more details.

SPECIFICATIONS

CONSTRUCTION

Housing	Extruded aluminum (0.075'' nominal) Up to 70% recycled content
Interior Brackets	Die formed sheet steel (18 gauge)
Reflectors	White powder coated sheet steel (22 gauge)
Blank	Extruded aluminum (0.075'' nominal)
Lens	Spotless acrylic lens
T-Bar Bracket	Die formed sheet steel (16 gauge)
Screw Slot T-Bar Bracket	Die formed sheet steel (16 gauge)
Slip-Through Bracket	Die formed sheet steel (18 gauge)
Spackle Flange	Die formed perforated sheet steel (20 gauge)
Flange	Extruded aluminum (0.075'' nominal) Visible flange width: 9/16"

FINISHES

Powder coated and custom finishes are also available.

LED SYSTEM

CRI	Minimum 80 or 90 color rendering index
CCT	Choice of 2700K, 3000K, 3500K and 4000K color temperature with a great color consistency (within 3.5–step MacAdam ellipse).
LED life	Minimum 50,000h with 70% of lumen maintenance in 25°C ambient temperature, in compliance with IES LM-80 testing measurements.
Thermal management	Aluminium housing acting as the heat sink to maximize life.

LED SYSTEM

CRI	Minimum 80 or 90 color rendering index.
CRI BIOS	Minimum 80 color rendering index with R9>90 for all CCTs.
CRI Color Tuning	Minimum 90 color rendering index.
CCT Single Color	Choice of 2700K, 3000K, 3500K and 4000K color temperature with a great color consistency (within 3–step MacAdam ellipse). Both within fixture and fixture to fixture.
CCT BIOS	BIOS Static (STC) Choice of 3000K, 3500K and 4000K. BIOS SkyBlue® Dynamic (DYN) Choice of 3000K, 3500K, and 4000K with Bio-Dimmng™ Consult BIOS guide for more information on BIOS technology.
CCT Axitune Systems	Consult Axitune technical sheet for more information on color technology.
LED life	Minimum 50,000h with 85% of lumen maintenance in 25°C ambient temperature, in compliance with IES LM-80 testing measurements.
Thermal Management	Aluminum housing acting as the heat sink to maximize life.
Environment	Dry and damp rated in operating ambient temperatures of 0-40°C (32-104F).

JOINERS

In order to allow very long runs of BEAM 3 LED luminaires, Axis has developed a number of different joining systems. Special care has been taken to maximize the performance of the joiner for each BEAM 3 LED option.

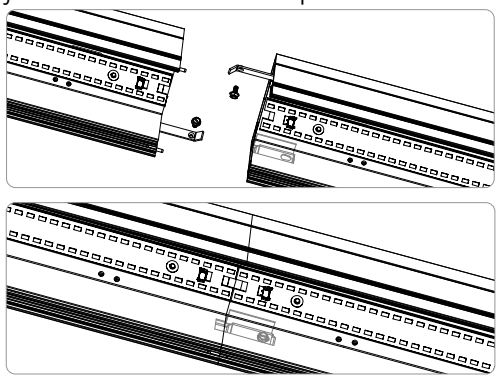

JOINER SYSTEM

NOTE: Hang each system segment individually. Do not assemble system prior to hanging.

WEIGHT

Recessed 4 ft	12.3 lbs / 5.0 kg
Recessed 8 ft	24.6 lbs / 10.1 kg
Recessed 12 ft	36.9 lbs / 15.1 kg

© 2016 Axis Lighting Inc.
1.800.263.2947
[T] 514.948.6272
axislighting.com

SHIELDING - Frosted acrylic Spotless lens

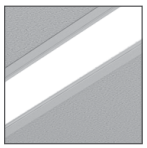

FL flush

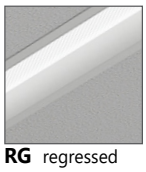

RG regressed

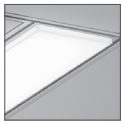

0.25G 0.25" GloLens

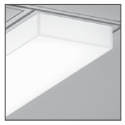

1.25M 1.25" StepLens, lum. end cap

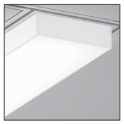

1.25P 1.25" StepLens, opaque end cap

StepLens

DLC Approved Options

*Check the latest update on the DLC website for complete information. Not all versions may be DLC qualified.

OUTPUT	CRI	COLOR TEMP.	SHIELDING	LENGTH	FINISH	VOLTAGE	DRIVER	CIRCUITS
400 lm/ft 650 lm/ft 850 lm/ft	80	3000 K 3500 K 4000 K	FL	4′ 5′ 6′ 7′ 8′ 9′ 10′ 11′ 12′	white	universal	DP	any exept LDI and M

APPROVALS

Certified to UL and CSA standards
Meets NYC requirements
Meets CCEC requirements (Chicago plenum)
Suitable for damp locations
IC Rated (Insulated ceiling)

STEP LENS OPTION

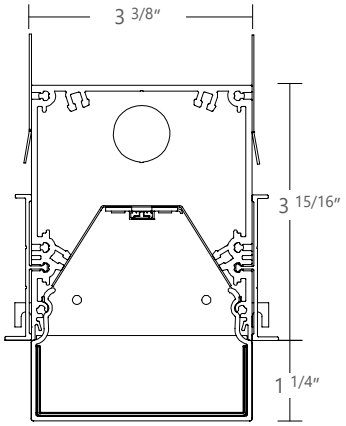

PERFORMANCE

LUMENS	WATTS	EFFICACY
950 lm/ft	8.73 W/ft	110 lm/W

950 lm/ft lm with 1.25" StepLens

StepLens

PHOTOMETRIC CURVE

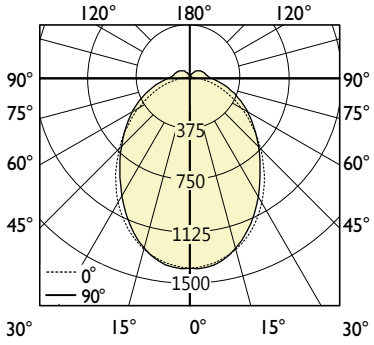

Total Lumens: 3783 lm (for 4ft)
Input Watts: 33.9 W
Efficacy: 112 lm/W

IES FILE: BMRLED-950-80-35-1.25M-4-W

CANDELA DISTRIBUTION

Vertical Angle	Horizontal Angles 0	22.5	45	67.5	90
0	1405	1405	1405	1405	1405
5	1391	1396	1393	1400	1405
15	1310	1321	1310	1303	1305
25	1159	1163	1142	1120	1116
35	955	960	932	907	899
45	734	746	730	718	713
55	524	547	552	554	555
65	336	370	397	412	414
75	177	222	264	285	287
85	59	109	159	180	183
90	21	72	120	142	143
95	17	66	110	129	130
105	12	56	94	111	113
115	9	43	80	96	99
125	6	32	65	81	85
135	4	22	46	64	68
145	2	11	30	41	45
155	1	3	14	24	27
165	0	0	2	6	9
175	0	0	0	0	0
180	0	0	0	0	0

ZONAL LUMENS

Zone	Lumens
0	
0-10	132
10-20	368
20-30	524
30-40	583
40-50	564
50-60	491
60-70	386
70-80	266
80-90	157
90-100	104
100-110	86
110-120	68
120-130	50
130-140	32
140-150	17
150-160	6
160-170	1
180	

LUMINANCE DATA (cd/m²)

Vertical Angle	Horizontal Angles 0	45	90
45	9528	7701	7057
55	8297	6593	6102
65	7096	5662	5300
75	5880	4856	4564
85	4939	4301	3999

All IES files are available for download at: www.axislighting.com

© 2016 Axis Lighting Inc.
1.800.263.2947
[T] 514.948.6272
axislighting.com

CORNERS

Unlit Corners - BEAM 3 LED features a multitude of layout patterns with the use of a number of corners, 90° corner, T or X junctions.

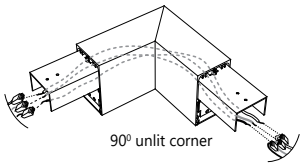

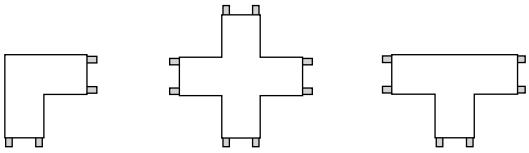

Lit Corners - Axis also offers lit 90° corners including ceiling to ceiling, wall to ceiling and ceiling to wall.

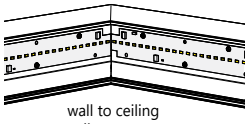

For custom corner angles, please consult factory. Specifications sheets for all corners are available at: www.axislighting.com

*For StepLens please consult factory.

WARRANTY

Axis Lighting will warrant defective LEDs, boards, and drivers for 5 years from date of purchase. Warranty is valid if luminaire is installed and used according to specifications. If defective, Axis will send replacement boards or drivers at no cost along with detailed replacement instructions and instructions on how to return defective components to Axis.

OTHER MOUNTING OPTIONS

BEAM 3 LED is also available with pendant, surface, wall, wall vertical, recessed asymmetric and recessed vertical mounted options.

Specification sheets and installation sheets for all mounting for BEAM 3 LED luminaires are available for download at: www.axislighting.com

TECHZONE™ AND LOGIX™

Integrated contiguous modules for PA speakers, Air Returns and Sprinkler Heads are available for our recessed Beam products to add a consistent linear system to complete the illuminated portion.

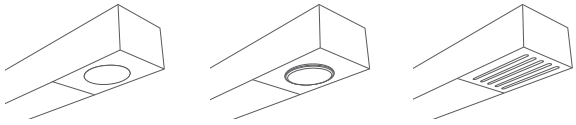

SPK SPEAKER **SR** SPRINKLER **AR** AIR RETURN

MR16 LED LAMPS

Blank	Extruded aluminum (0.075'' nominal)
MR16 Halogens	Adjustable halogen lamp 35W / 50W (by others) - **Line voltage dimming only**
MR16 LED	Adjustable LED lamp (provided)- **Line voltage dimming only**
MR16 LEDB	Constant current LED lamp (provided)- **Dimmable by control system for 0-10V DALI only**
Quantity	For every 4' section, there may be up to a maximum of 4 x MR16 LED lamps.
Spacing	Each MR16 LED lamp is placed centered on a blank section 9'' in length. For a series of MR16's within a given section length, they will be spaced evenly on a longer blank section. The directed light of MR16 LED lamps are fixed downward. Custom spacing may be available on special request.

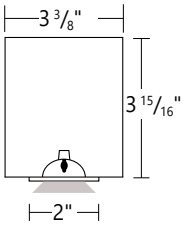

Between sections

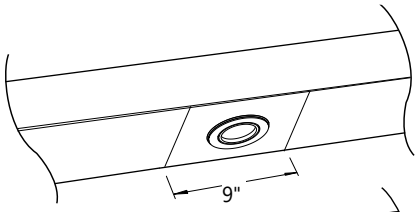

At luminare ends

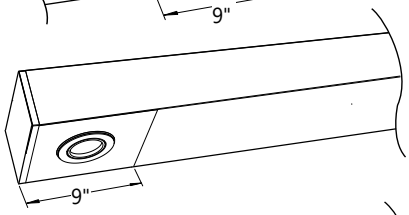

Several in a long blank section

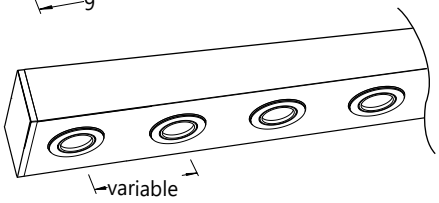

Base Type	GU 5.3
Beam Angle	40 nominal degrees
Input Watts	6W
Nominal Lumens	300 lumens
Efficacy	50 lumens per watt
Color Rendering Index (CRI)	85
Center Beam Candle Power (CBCP)	584 candelas
Life	25,000 hours at L_{70}
Correlated color temperature (CCT)	2700K, 3000K

More options are available upon request. Please consult factory.

© 2016 Axis Lighting Inc.
1.800.263.2947
[T] 514.948.6272
axislighting.com

TB CEILING MOUNTING OPTIONS

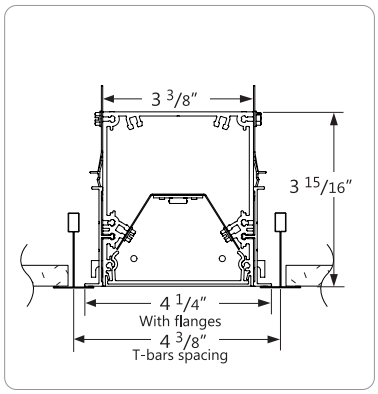

TB15 15/16" T-BAR

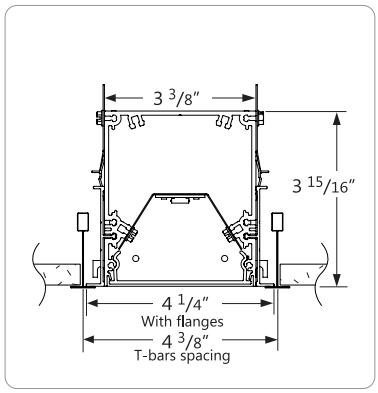

TB9 9/16" T-BAR

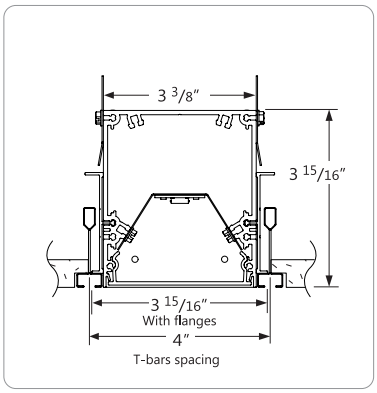

ST SCREW SLOT T-BAR

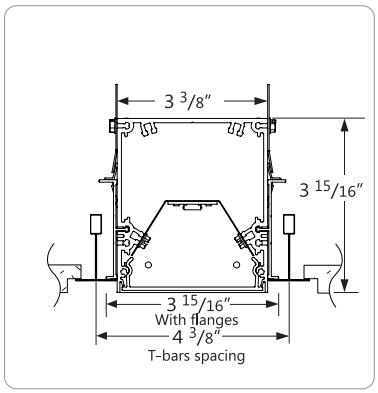

TG15 15/16" TEGULAR

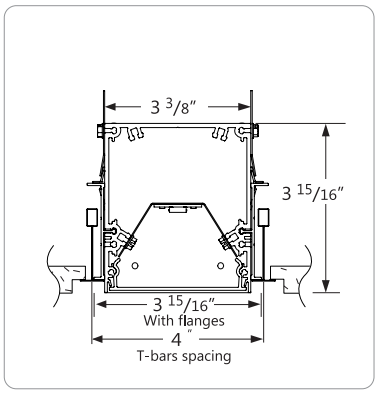

TG9 9/16" T-TEGULAR

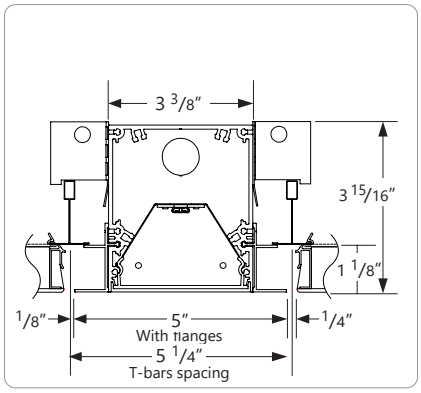

TX TX HUNTER DOUGLAS TECHSTYLE

DRYWALL CEILING MOUNTING OPTIONS

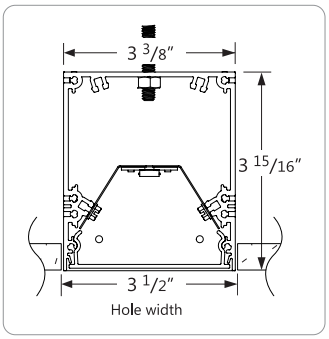

D FLANGELESS WITH 1/4-20 STUD MOUNTING

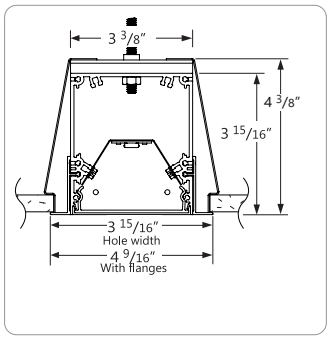

DB VISIBLE FLANGES WITH SLIP-THROUGH BRACKET

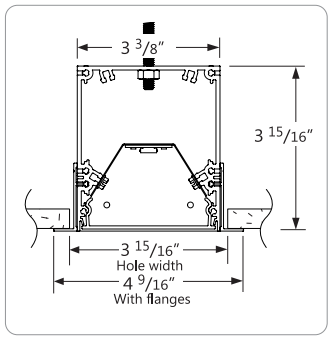

DF VISIBLE FLANGES WITH 1/4-20 STUD MOUNTING

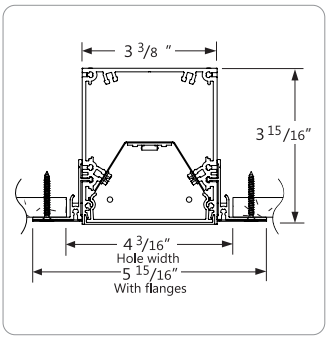

DS SPACKLE FLANGES

OTHER MOUNTING OPTIONS

BEAM 3 LED is also available with pendant, surface, wall and recessed wall mounted options.

ℹ Specification sheets and installation sheets for all mounting for BEAM luminaires are available for download at www.axislighting.com

© 2016 Axis Lighting Inc.

1.800.263.2947
[T] 514.948.6272
axislighting.com

PHOTOMETRIC DATA

400 lm/ft

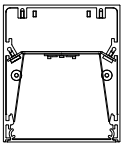

PHOTOMETRIC CURVE

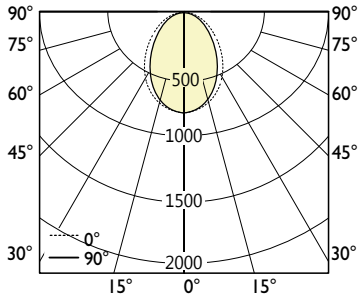

Luminaire Lumens: 400 lm/ft
Input Watts: 3.6 W/ft
Efficacy: 109 lm/W

IES FILE: BMRLED-400-80-35-FL.IES
TESTED ACCORDING TO IES LM-79-2008.

CANDELA DISTRIBUTION

	Horizontal Angles				
Vertical Angle	0	22.5	45	67.5	90
0	724	724	724	724	724
5	716	719	716	720	723
15	677	679	672	668	670
25	603	600	586	574	572
35	501	496	477	457	449
45	389	383	362	340	331
55	279	274	255	235	228
65	177	174	160	148	143
75	88	88	82	75	73
85	22	21	19	18	17
90	0	0	0	0	0

ZONAL LUMENS

	Lumens
Zone	
0	
0-10	68
10-20	189
20-30	270
30-40	298
40-50	279
50-60	228
60-70	159
70-80	87
80-90	23
90	

LUMINANCE DATA (cd/m²)

	Horizontal Angles		
Vertical Angle	0	45	90
45	5750	5347	4891
55	5074	4640	4159
65	4369	3966	3530
75	3558	3292	2936
85	2589	2325	2008

500 lm/ft

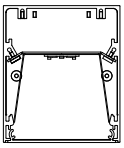

PHOTOMETRIC CURVE

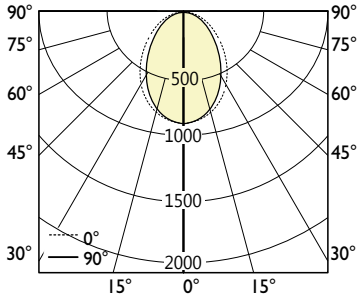

Luminaire Lumens: 500 lm/ft
Input Watts: 4.6 W/ft
Efficacy: 108 lm/W

IES FILE: BMRLED-500-80-35-FL.IES
TESTED ACCORDING TO IES LM-79-2008

CANDELA DISTRIBUTION

	Horizontal Angles				
Vertical Angle	0	22.5	45	67.5	90
0	905	905	905	905	905
5	894	898	896	900	903
15	846	849	840	835	837
25	753	750	733	718	715
35	627	619	596	572	562
45	487	478	452	425	414
55	348	342	319	294	285
65	221	217	201	185	179
75	110	110	102	94	91
85	27	26	24	23	21
90	0	0	0	0	0

ZONAL LUMENS

	Lumens
Zone	
0	
0-10	85
10-20	237
20-30	337
30-40	372
40-50	348
50-60	285
60-70	199
70-80	108
80-90	28
90	

LUMINANCE DATA (cd/m²)

	Horizontal Angles		
Vertical Angle	0	45	90
45	7188	6683	6114
55	6343	5801	5198
65	5462	4958	4413
75	4448	4114	3670
85	3236	2906	2510

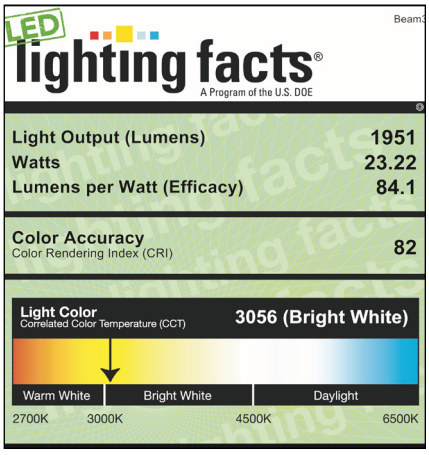

All IES files are available for download at: www.axislighting.com

© 2016 Axis Lighting Inc.
1.800.263.2947
[T] 514.948.6272
axislighting.com

PHOTOMETRIC DATA

750 lm/ft

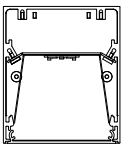

PHOTOMETRIC CURVE

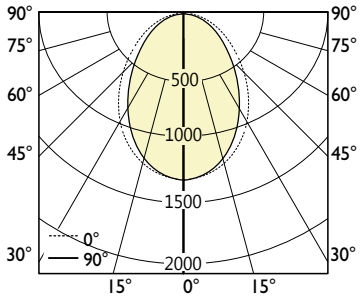

Luminaire Lumens: 750 lm/ft
Input Watts: 7.1 W/ft
Efficacy: 105 lm/W

IES FILE: BMRLED-750-80-35-FL.IES
TESTED ACCORDING TO IES LM-79-2008

CANDELA DISTRIBUTION

	Horizontal Angles				
Vertical Angle	0	22.5	45	67.5	90
0	1357	1357	1357	1357	1357
5	1342	1347	1343	1350	1355
15	1269	1274	1261	1252	1256
25	1130	1124	1099	1077	1073
35	940	929	894	857	842
45	730	718	679	637	621
55	522	513	478	441	428
65	331	326	301	278	268
75	165	165	153	141	136
85	41	40	36	34	31
90	0	0	0	0	0

ZONAL LUMENS

	Lumens
Zone	
0	
0-10	128
10-20	355
20-30	506
30-40	558
40-50	523
50-60	427
60-70	299
70-80	162
80-90	43
90	

LUMINANCE DATA (cd/m²)

	Horizontal Angles		
Vertical Angle	0	45	90
45	10782	10025	9170
55	9514	8701	7798
65	8193	7437	6619
75	6672	6172	5504
85	4854	4359	3765

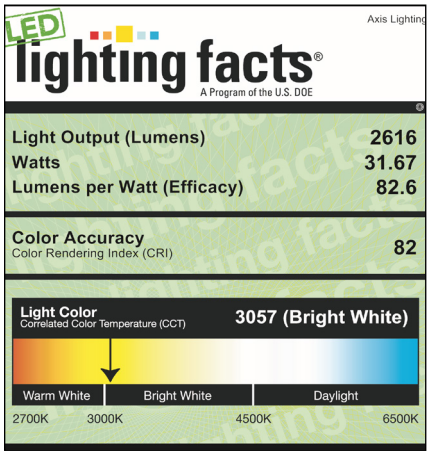

1000 lm/ft

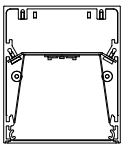

PHOTOMETRIC CURVE

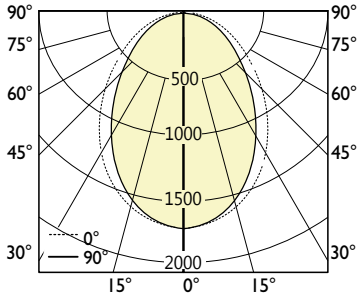

Luminaire Lumens: 1000 lm/ft
Input Watts: 9.7 W/ft
Efficacy: 103 lm/W

IES FILE: BMRLED-1000-80-35-FL.IES
TESTED ACCORDING TO IES LM-79-2008

CANDELA DISTRIBUTION

	Horizontal Angles				
Vertical Angle	0	22.5	45	67.5	90
0	1810	1810	1810	1810	1810
5	1789	1797	1791	1800	1807
15	1692	1699	1681	1670	1674
25	1507	1499	1466	1436	1431
35	1253	1239	1192	1143	1123
45	973	957	905	850	828
55	697	684	637	589	571
65	442	434	401	370	357
75	220	219	204	188	182
85	54	53	48	45	42
90	0	0	0	0	0

ZONAL LUMENS

	Lumens
Zone	
0	
0-10	170
10-20	473
20-30	674
30-40	744
40-50	697
50-60	570
60-70	399
70-80	217
80-90	57
90	

LUMINANCE DATA (cd/m²)

	Horizontal Angles		
Vertical Angle	0	45	90
45	14376	13367	12227
55	12685	11601	10397
65	10924	9916	8826
75	8896	8229	7339
85	6472	5812	5019

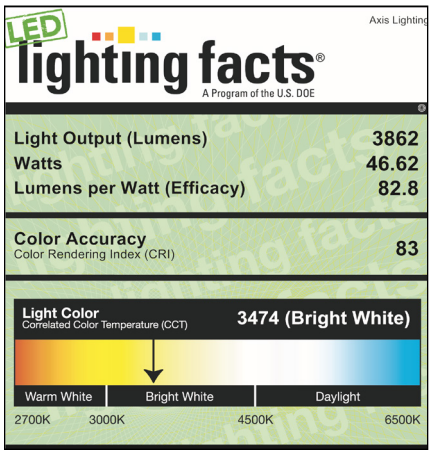

All IES files are available for download at: www.axislighting.com

© 2016 Axis Lighting Inc.
1.800.263.2947
[T] 514.948.6272
axislighting.com